THINK SECURITY
THINK CP PLUS

CP PLUS

CP-SNC-D20L1-VD

2 MP Full HD WDR IR Mobile Dome Camera- 10 Mtr.

- 1/2.9” 2MP CMOS Image Sensor
- H.265/ H.264 Video Compression
- Dual Stream Encoding
- Supports 30fps@1080P
- 2.6mm,2.8mm, 4mm Lens
- WDR, AWB, BLC, AGC
- IR Range of 10 Mtr., Supports PoE
- IP66(Without audio), IP65(With audio)

System Overview

This Camera is the perfect solution for various kinds of vehicles, including bus, coach, van etc. The vehicle-mounted CCTV cameras enable drivers and operator to check anytime what happen inside and outside the vehicle by delivering a live feed on the monitor of everything in the camera view, including people or obstacles. Moreover, fitted with Infra-Red LEDs for improved night vision and combined with a robust, durable casing, the operation system offers unrivalled performance and clarity.

Functions

H.264 Video Compression

The most reliable video compression design, which is H.264, has been provided in this product. This technology is beneficial for minimising storage costs as well as enabling you to save on resolution and the rate of from in the video with the help of Intelligent Region Perception to detect motion in each frame.

*Product casing and specifications are subject to change without prior notice

THINK SECURITY
THINK CP PLUS

CP PLUS

CP-SNC-D20L1-VD

2 MP Full HD WDR IR Mobile Dome Camera- 10 Mtr.

Functions

Vibration Resistant

This camera has been crafted with a vibration resistant design to prevent damage under harsh conditions or environmental pressures.

IR LED

IR LEDs provide detailed images even in very low light conditions. These LEDs adjust the infrared intensity for distinct images in dark environments for up to 10mtrs

About CP PLUS

The brand that is on its way to lead the world when it comes to the security and surveillance industry, CP PLUS, keeps bombarding the market with the most reliable range of products that have been designed carefully and methodically to automate the whole surveillance and security process, no matter how big your premises are.

It was the initiative to help the public in the area where they are the most vulnerable and to empower the sense of safety in our hearts that had conceptualized CP PLUS. And embarking on its mission to make the world a safer and more secure place has taken the brand's journey to unprecedented levels even when compared to international competitors.

THINK SECURITY
THINK CP PLUS

CP PLUS

CP-SNC-D20L1-VD

2 MP Full HD WDR IR Mobile Dome Camera- 10 Mtr.

Feature	Specification
Image Sensor	1/2.9" 2 MP CMOS Image Sensor
Minimum Illumination	0.1Lux(Color Illumination), F1.2
Effective Pixels	1920(H) x 1080(V)
Shutter Speed	1/30 Second -1/10000 Second
White Balance	Support
Gain Control (AGC)	Support
Lens	2.6mm,2.8mm, 4mm, M12 Fixed aperture F1.8
Back Light Compensation	Support
S/N Ratio	≥45db
Video Compression	H.265/ H.264
Angle of View	2.6mm=H x V (108 x 61°) / 2.8mm=H x V (96 x 55°) / 4mm= H x V (73 x41°)
Video Streaming	Main Stream: 1080P(720P) @ 30fps , Sub Stream1: VGA/WD1/D1/QVGA/CIF @30fps Net transmission stream: Dynamic (adjustable)
Audio Compression	ADPCM, G.711A, G.711U, G.726
WDR	(WDR) ≥90db
Bit Rate	512Kbps-8Mbps
Protocol	TCP/IP, HTTP, DHCP, RTSP, NTP, FTP, Onvif
Ethernet	10M/100M adaptive Ethernet port
IR	10 Mtrs.
Operating Temperature	-40°C ~ +70°C
Humidity	0% - 90%
Power Source	DC 12V/PoE
Power Consumption	<2w (Day) <3.5w (Night)
Weatherproof Standard	IP66(Without audio), IP65(With audio)
Dimension	101.5mm x 96mm x 52.6mm

ASIA TOP 2 | WORLD TOP 4

CE FC RoHS COMPLIANT Onvif

*Product casing and specifications are subject to change without prior notice
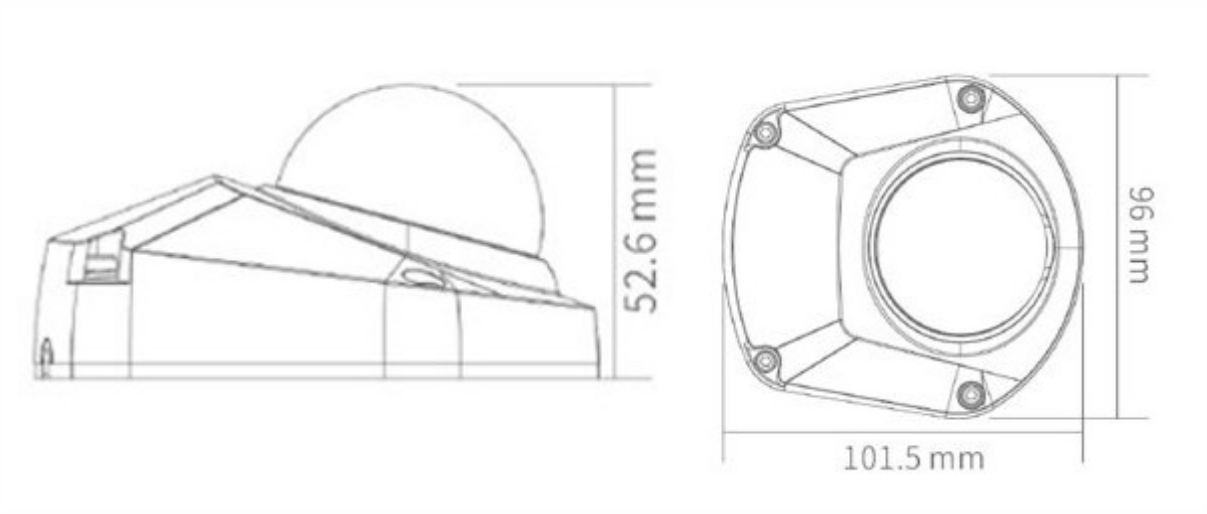
Dimensions (mm/inch)