THINK SECURITY
THINK CP PLUS

CP PLUS

CP-VNC-R83L5-VMDS

4K Panoramic IR Network Camera

- 1/1.8", 2MP, Progressive scan, CMOS Image Sensor (4.572 cm)
- Max 30fps@(4096x1800)
- Ultra 265, H.265, H.264, MJPEG triple-stream encoding
- WDR(120dB), Day/Night (ICR), 2D/3D-DNR, Digital Defog, ROI, AWB, AGC, BLC, HLC
- 4x4.2mm lens
- Support Starlight Technology
- Support a horizontal viewing angle of 180°
- IR Range of 50 Mtrs, Micro SD Card, IP67
- Support Instastream technology, save diskspace and bandwidth upto 70%
- Mobile Software: Android, iOS
- CMS Software: IVMS

System Overview

This series has been crafted using the Panamorph technology, which is a revolutionary 180° solution to various applications. There are two major components that make the Panomorph technology a potential leader in its field, which are the patented Panomorph optics and the viewing functionality for optimal 180° image quality. The Panomorph technology helps remove distortion from magnified zones and the viewing functionality enables the complete 180° immersive navigation within a live or recorded video.

Functions

Ultra H.265

H.265 is the latest innovation among the standard video compression designs. This technology is beneficial for minimizing storage costs and provides big savings on resolution and the rate of frame in the video through the use of Intelligent Region Perception to detect motion in each frame.

*Product casing and specifications are subject to change without prior notice

THINK SECURITY
THINK CP PLUS

CP PLUS

CP-VNC-R83L5-VMDS

4K Panoramic IR Network Camera

Functions

Starlight Technology

This camera is widely used to provide sharper and clearer picture quality with the help of its exceptional starlight sensitivity as the camera improves night vision in low light conditions. This technology is useful in conditions with extremely low light as the starlight technology turns almost completely dark images into those of clear colors.

Regions of Interest

Regions of Interest (ROI) is a user defined feature that allows the operator to monitor specific areas of a scene while still maintaining overall situational awareness of less important areas.

Smart Analytical Support

Using an advanced algorithm, smart analytical technology lets you set a multitude of safety parameters and sends you alerts when any of those parameters have been compromised. Not just when there's an occurrence of tripwire or intrusion, but also in the cases of missing or moving objects.

True Day/Night (ICR)

When the scene is too dark, the image is captured by illuminating an infrared light through the camera onto the scene that greatly helps with making the scene visible for the lens. It delivers color images during the day and automatically switches to the monochrome feature as the scene darkens.

Live Viewing

Unlike some, this technology enables you to record the picture feed but view it live as well at your convenience. On top of that, the advantages of high-resolution video recording are numerous.

About CP PLUS

The brand that is on its way to lead the world when it comes to the security and surveillance industry, CP PLUS, keeps bombarding the market with the most reliable range of products that have been designed carefully and methodically to automate the whole surveillance and security process, no matter how big your premises are.

It was the initiative to help the public in the area where they are the most vulnerable and to empower the sense of safety in our hearts that had conceptualized CP PLUS. And embarking on its mission to make the world a safer and more secure place has taken the brand's journey to unprecedented levels even when compared to international competitors.

THINK SECURITY
THINK CP PLUS

CP PLUS

CP-VNC-R83L5-VMDS

4K Panoramic IR Network Camera

Feature	Specification
Image Sensor	1/1.8", 2MP, Progressive scan, CMOS Image Sensor (4.572 cm)
Minimum Illumination	Colour: 0.002lux (F1.8,AGC ON) 0lux with IR
Shutter Speed	Auto/Manual, Shutter Time: 1~1/100000s
White Balance	Auto/Manual
Iris	F1.8
Adjustment Angle	Pan: -90°~90° ; Tilt: -45°~60°
Lens	4 x 4.2mm lens
S/N	>55dB
DORI Distance	4.2mm– 50.4m (Detect) 20.2m (Observe) 10.1m (Recognize) 5.0m (Identify)
Back Light Compensation	BLC/ HLC/ WDR(120dB)
Gain Control (AGC)	Auto/Manual
Video Compression	Ultra 265, H.265, H.264, MJPEG
Angle of View	180°(H), 80°(V), 221.4°(O)
Privacy Mask	Up to 8 areas
ROI	Up to 8 areas
Noise Reduction	2D/3D-DNR
ICR	IR-cut filter with auto switch (ICR)
Frame Rate	Main Stream: 4096×1800:Max. 30 fps; Sub Stream: 1920×832:Max. 30 fps; Third Stream: 1280×560: Max. 30 fps
OSD	Up to 8 OSDs
Audio Input	1 Input: impedance 35kΩ; amplitude 2V [p-p]
Audio Output	1 output: impedance 600Ω; amplitude 2V [p-p]
Audio	Two way Audio
Audio Compression	G.711
Suppression	Supported

*Product casing and specifications are subject to change without prior notice

Feature	Specification
Sampling Rate	8KHZ
Alarm IN	2 channel
Alarm Out	1 channel
Smart Detection	Line crossing detection, Intrusion detection, Motion detection, Object Moving, Object Left, Defocus, Scene Change, Audio detection, People counting
Protocol	IPv4, IGMP, ICMP, ARP, TCP, UDP, DHCP, PPPoE, RTP, RTSP, RTCP, DNS, DDNS, NTP, FTP, UPnP, HTTP, HTTPS, SMTP, 802.1x, SNMP, QoS, ONVIF (Profile S, Profile G, Profile T), API
General Function	Watermark, IP address filtering, tampering alarm, alarm input, alarm output, access Policy, ARP protection, RTSP authentication, user authentication
Ethernet	1 x 100M/1000M Base-FX SFP + 2 x 10M/100M/1000M Base-TX Ethernet
Smart Phone	iPhone, iPad, Android Phone
IR	IR Range of 50 Mtr., Smart IR
Micro SD	Micro SD, up to 256GB
Network Storage	ANR
Operating Temperature	-40°C ~ +70°C (-40°F ~ 158°F), Humidity: 10%~95% RH (non-condensing)
Power Source	AC24V±25%/DC24V support 18V-48V
Power Consumption	Max 45W
Weatherproof Standard	IP67
Dimension	259mmx211mmx115mm（(10.2”×8.3”×4.5”)
Reset Button	Supported
Weight	2.4kg
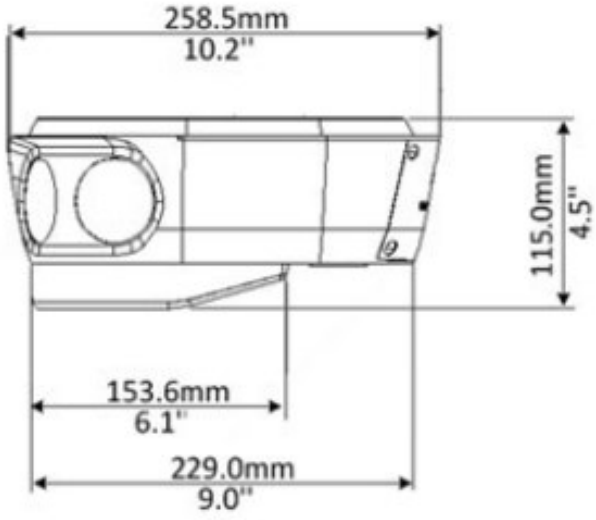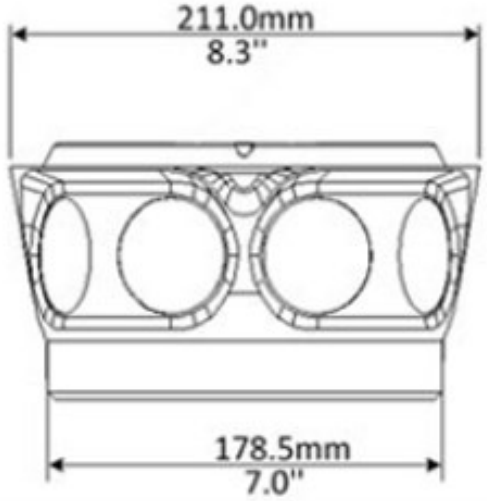
Dimensions (mm/inch)